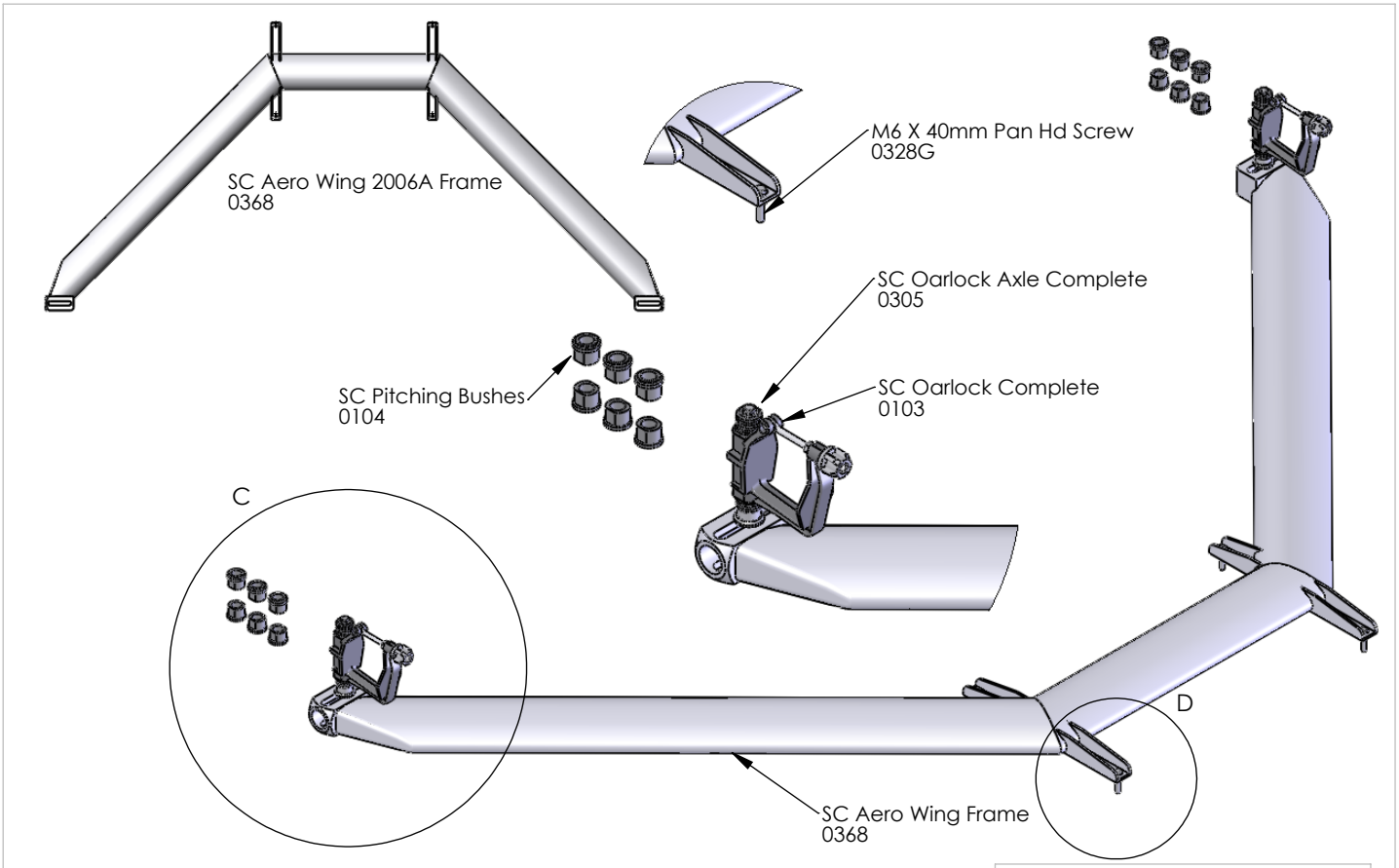

Sculling Aero Wing Rigger Sets
Type: Standard

0380 Aero Wing Single Scull
0381 Aero Wing Double Scull
0382 Aero Wing Quad Scull
0383 Aero Wing Coxed Quad Scull

Standard Scull Aero Wing Rigger

Sweep Aero Wing Rigger Sets
Type: Standard

0385 Aero Wing Coxless Pair
0386 Aero Wing Coxed Four
0387 Aero Wing Coxless Four
0388 Aero Wing Eight

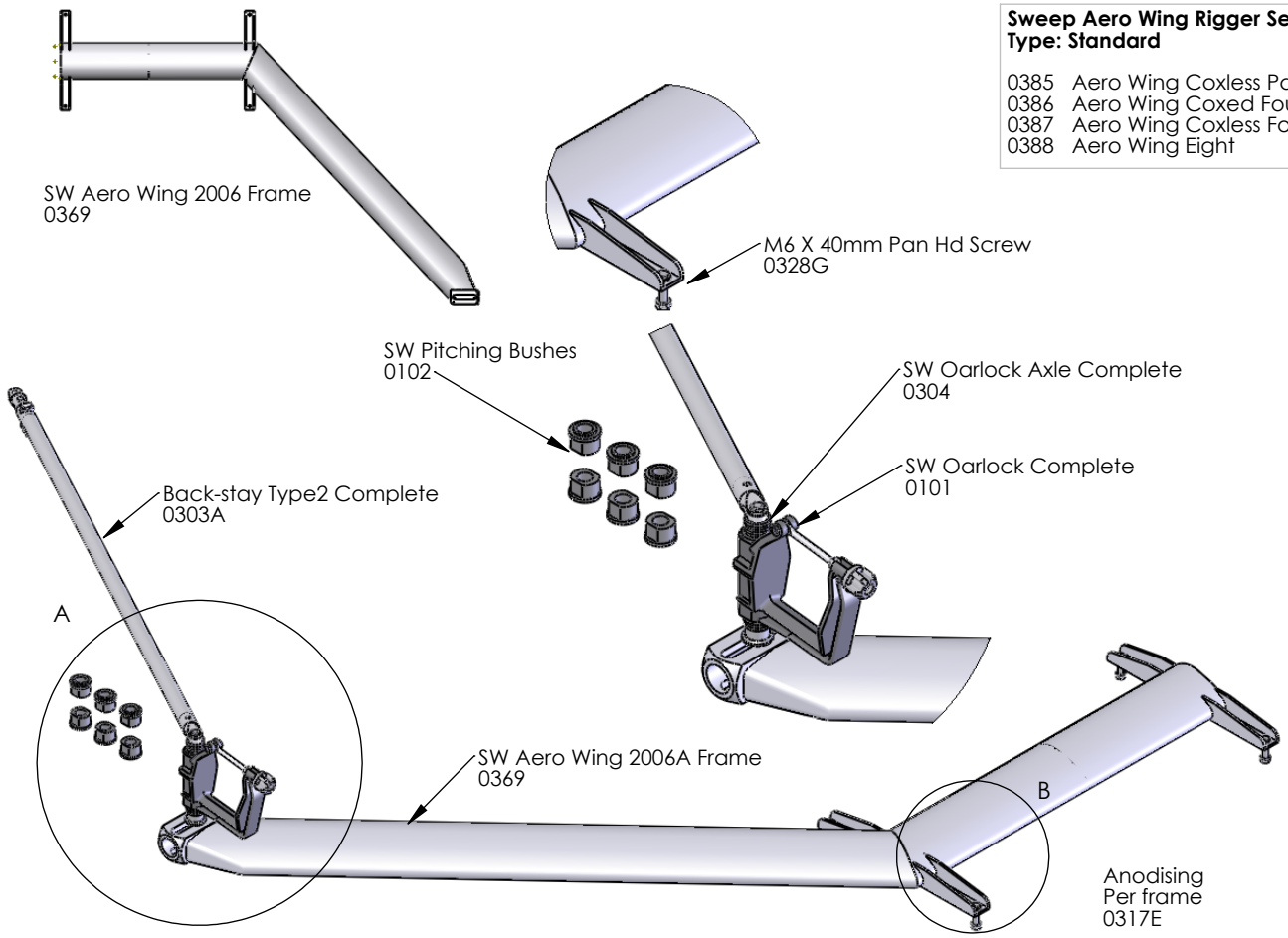

Standard Sweep Aero Wing Rigger